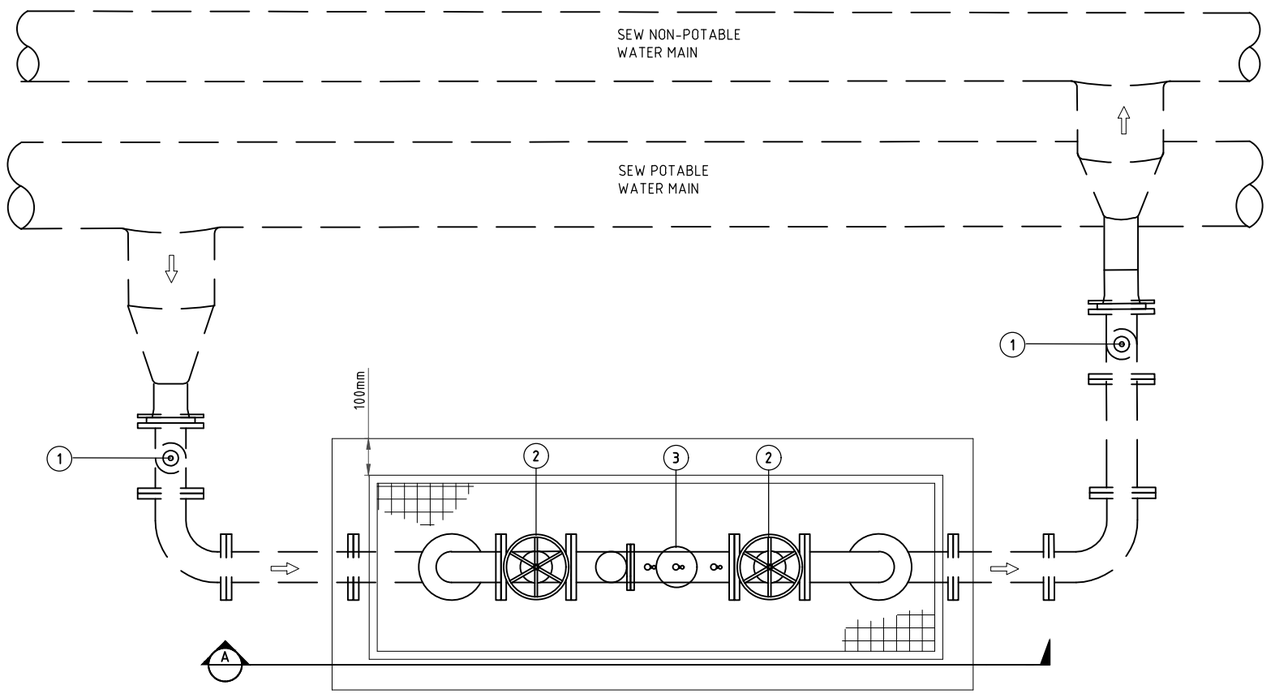

PLAN
N.T.S.

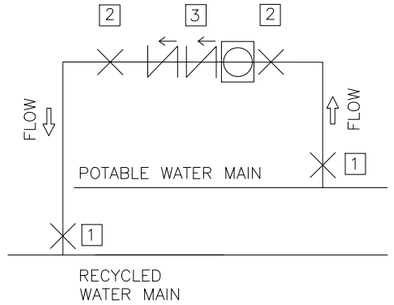

SYMBOL LEGEND		
SYMBOL	NUM.	DESCRIPTION
	1	ISOLATION VALVE (BELOW GROUND)
	2	RESILIENT SEATED GATE VALVE (ABOVE GROUND)
	3	TESTABLE RPZD BACKFLOW PREVENTION DEVICE C/W INLINE STRAINER TO AS2845.1

SCHEMATIC LAYOUT

NOTES:

1. TRAFFICABLE AREAS - INSTALL PROTECTION GUARDS, UNLESS OTHERWISE APPROVED BY SEW. TO PREVENT DAMAGE FROM VEHICLES AND RESTRICT ACCESS BY PEDESTRIANS.
2. INSTALL CONCRETE PAD AS SHOWN FOR UNSEALED (HARDSTAND) AREAS (CONCRETE PAD MAY BE OMITTED FOR SEALED AREAS AND GARDEN BEDS).
3. SECURITY CAGE TO HAVE REMOVABLE TOP AND FRONT PANELS FOR MAINTENANCE ACCESS.
4. REDUCED PRESSURE ZONE TESTABLE BACKFLOW PREVENTION DEVICE SHALL BE INSTALLED IN ACCORDANCE WITH AS/NZS 3500.1.
5. ABOVE GROUND ISOLATION ('STOP') VALVES SHALL BE APPROVED RESILIENT SEATED GATE VALVE FITTED WITH HAND WHEEL. HOWEVER, WHERE THE INTERCONNECTOR IS DN50MM OR LESS, APPROVED BALL VALVES MAY BE UTILISED IN PLACE OF RESILIENT SEATED GATE VALVES.
6. USE GRADE N32 CONCRETE FOR THE INTERCONNECTOR ARRANGEMENT PAD. CONCRETE TO COMPLY WITH AS 1379 SPECIFICATION & SUPPLY OF CONCRETE. .
7. USE ONLY THOSE MANUFACTURERS PRODUCTS SHOWN APPROVED BY SEW.
8. ISOLATION VALVE, PIPE AND FITTINGS DOWNSTREAM OF RPZD, MUST BE EPOXY COATED IN LILAC. PURPLE COLOUR DEFINED IN ACCORDANCE WITH AS 2700 AS BEING NO DARKER THAN P24 JACARANDA OR P12 PURPLE AND NO LIGHTER THAN P23 LILAC.
9. ALL FLANGES TO BE AS 2129 TABLE D.
10. WHEN POURING CONCRETE AGAINST FITTINGS, PLACE GEOTEXTILE FELT (MIN. 6MM THICK) BETWEEN FITTING AND CONCRETE TO PREVENT DAMAGE TO THE FITTING. JOINTS MUST BE CLEAR OF CONCRETE.
11. 316SS STEEL BOLTS WITH 304SS NUTS TO BE USED FOR ABOVE GROUND FLANGES (RATED TO PN16).
12. REFER TO "DUAL WATER INTERCONNECTION TYPICAL ARRANGEMENT -DRAWING 2" FOR RELEVANT MATERIAL SPECIFICATION AND MIN. REQUIRED CLEARANCE BETWEEN CAGE AND FITTINGS.

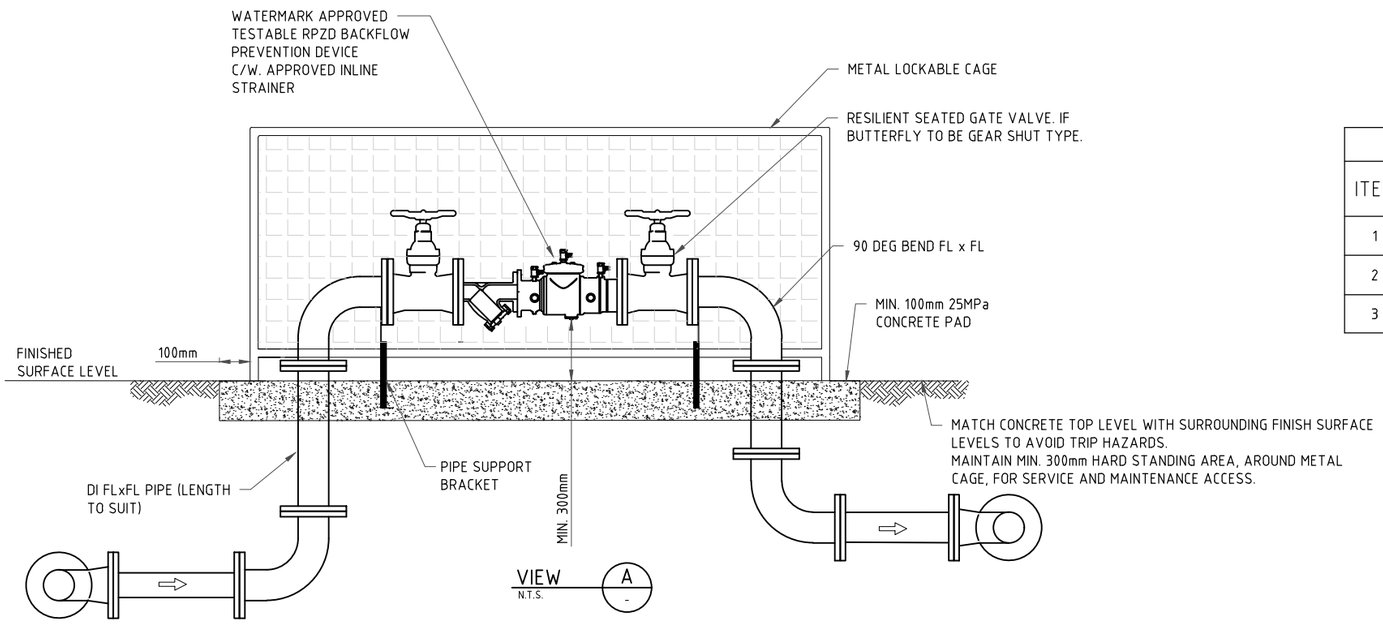

VIEW A
N.T.S.

SCHEDULE OF ITEMS			
ITEM	DESCRIPTION	QTY	NOTES
1	RESILIENT SEATED ISOLATION VALVE (BELOW GROUND)	2	NO HANDWHEELS BELOW GROUND
2	RESILIENT SEATED GATE VALVE (ABOVE GROUND)	2	FL x FL
3	TESTABLE RPZD BACKFLOW PREVENTION DEVICE C/W INLINE STRAINER TO AS2845.1	1	FL x FL

SEW APPROVED
FISHERMANS BEND PRECINCT ONLY

REV	DESCRIPTION	JOB No	DRAFTER	DES. REVIEW	PM. APP'D	DATE	VENDOR DRAWING No:
0	SEW APPROVED DRAWING	.	M.N.	.	.	07/12/23	SEW.STD.RR.1192

DESIGNER: M. NEDOMACKI
DRAFTER: M.NEDOMACKI
SEW PROJECT MANAGER: PAUL GALVIN
DESIGN REVIEW:
DRAFT CHECK:
ASSET/ENG. MANAGER: MARTEEN VAN HERK
APPROVED:

COPYRIGHT
"THIS DOCUMENT IS AND SHALL REMAIN THE PROPERTY OF SOUTH EAST WATER. THIS DOCUMENT MAY ONLY BE USED FOR THE PURPOSE FOR WHICH IT WAS COMMISSIONED AND IN ACCORDANCE WITH THE TERMS OF ENGAGEMENT FOR THE COMMISSION. THIS DESIGN SHOULD NOT BE COPIED OR AMENDED WITHOUT WRITTEN PERMISSION FROM SOUTH EAST WATER. UNAUTHORISED USE OF THIS DOCUMENT IN ANY WAY IS PROHIBITED."©

South East Water
101 Wells Street, Frankston, VIC 3199 W : www.sew.com.au
T : 61 3 9552 3000 F : 61 3 9552 3001 E : info@sew.com.au

SOUTH EAST WATER
FISHERMANS BEND PRECINCT
TYPICAL TEMPORARY DUAL WATER
INTERCONNECTION ARRANGEMENT

DATUM: MGA94
MELWAY REF: MELWAY REF
SCALE: N.T.S.
SHEET SIZE: A1
SEW DRAWING NUMBER
SEW.STD.RR.1192
SEW JOB No: .
REV 0

CAD FILE NAME: P:\Shared\Recycled Water\Fishermans Bend_Temp. Interconnector\Drawings\DWGS\SEW-STD-TEMP-FB-DWG A.dwg

Plotted @ 07/12/2023 3:02pm by mnedomac